Control Module
PNOZ pe1p

Control module for the PNOZpower modular safety system in accordance with EN 60204-1 (VDE 0113-1), 11/98 IEC 60204-1, 10/97

Features

- Driven via safety contacts or safe semiconductor outputs
- Single-channel operation without detection of shorts across contacts
- Dual-channel operation with or without detection of shorts across contacts
- Plug-in connection terminals

Approval

	PNOZ pe1p
BG-PRÜFZERT	●
UL LISTED	●
c UL LISTED	●

Technical Details	PNOZ pe1p
Electrical Data	
Supply voltage	DC: 24 V
Tolerance	80 ... 125 %
Residual Ripple	48 %
Power consumption	2 W
Voltage and current at the input circuit at the feedback circuit	 24 V DC, max. 30 mA 24 V DC, max. 1 A
Times	
Switch-on delay	max. 10 ms + Switch-on delay of expansion module
Delay-on De-energisation	max. 30 ms + Delay-on De-energisation of expansion modules
Max. supply interruption before de-energisation	Approx. 10 ms
Mechanical Data	
Cable cross section 1 Core 2 cables with the same cross	 flexible: 0.5 ... 1.5 mm² flexible with crimp connectors without insulating sleeve: 0.5 x 1.5 mm² flexible without crimp connectors or with TWIN crimp: 0.5 x 1.5 mm²
Torque setting for connection terminals	0.25 Nm (screws)
Mounting Position	On a top hat rail installed horizontally.
Protection Housing	IP 30
Dimensions (H x W x D)	87 x 22.5 x 121 mm
Weight	175 g

Beschreibung

- 22.5 mm P-01 housing, DIN-Rail mounting
- Connections for
  - safety contacts (e.g. safety relays PNOZ)
  - safe semiconductor outputs (e.g. outputs from PSS)
- Output connected to PNOZpower Bus
- Maximum of 4 expander modules can be connected.
- Connection between PNOZ pe1p and expansion module via PNOZpower Bus bus using connector plug on the backside of the unit.
- LEDs for status of input circuit, power supply and faults.
- Connection for feedback loop

Operating modes

- Single-channel without detection of shorts across contacts
- Dual-channel with or without detection of shorts across contacts

Pilz GmbH & Co. KG, Sichere Automation, Felix-Wankel-Straße 2, 73760 Ostfildern, Germany
Telephone +49 (7 11) 34 09-0, Telefax +49 (7 11) 34 09-1 33, E-Mail: pilz.gmbh@pilz.de

Control Module
PNOZ pe1p

Internal wiring diagram

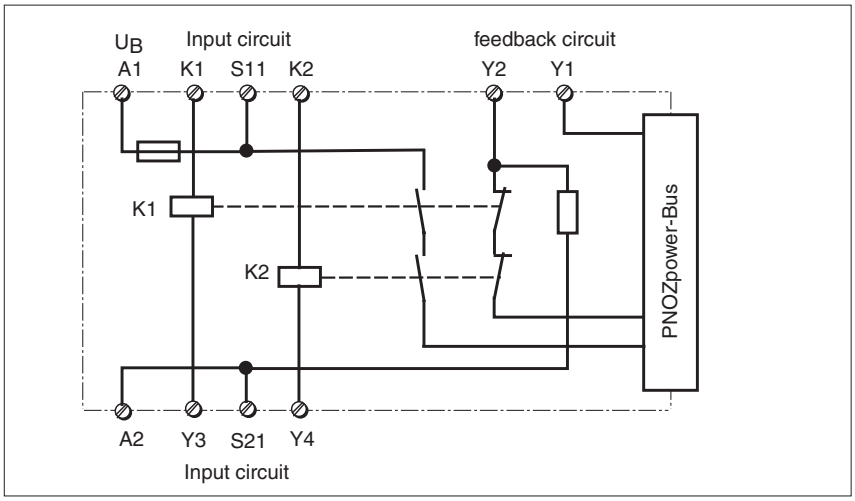

External wiring

● PNOZpower Bus: Control module connected with 4 expansion modules and power supply via connector plugs.

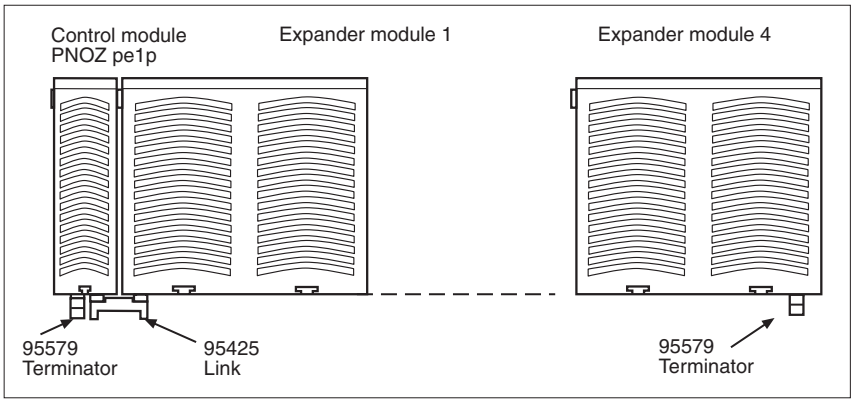

● Example 1
Dual-channel, driven via safety contacts without detection of shorts across contacts

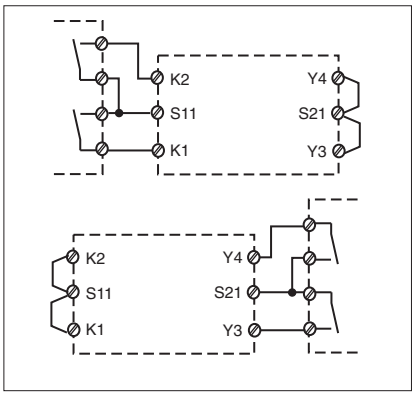

● Example 2
Dual-channel, driven via safety contacts with detection of shorts across contacts

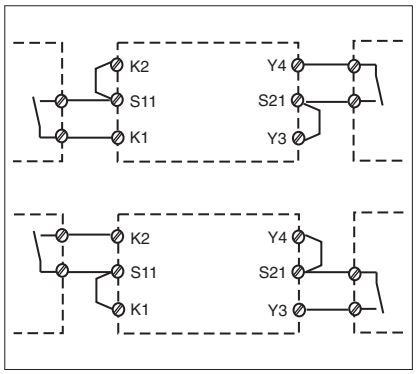

● Example 3
Single-channel, driven via semiconductor outputs without detection of shorts across contacts

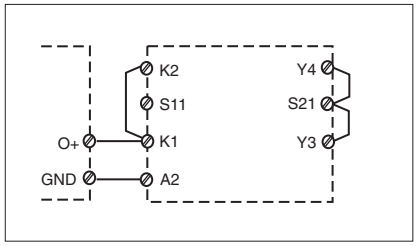

● Example 4
Single-channel, driven via semiconductor outputs, detection of shorts across contacts depends on master controller

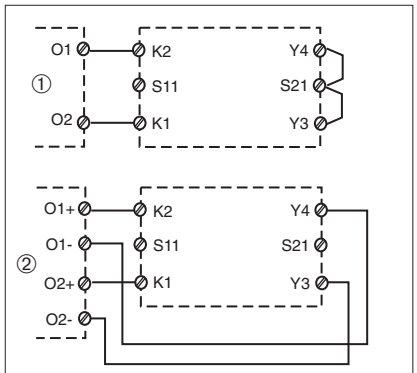

① Digital outputs, earth-switching
② Digital outputs, positiv- and negative-switching

Control Module
PNOZ pe1p

Connenction examples

- Driven via semi-conductor outputs

detection of shorts across contacts depends on master controller

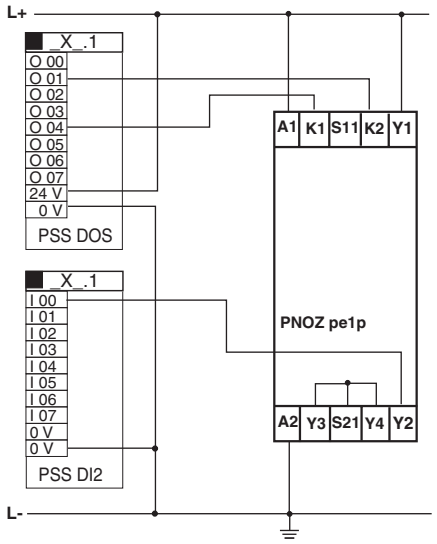

with detection of shorts across contacts

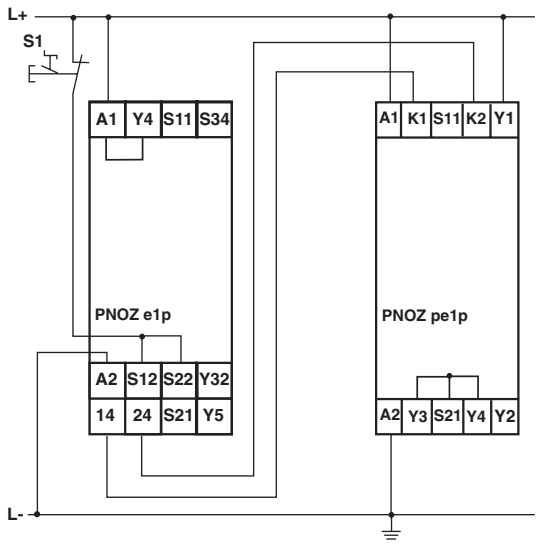

- Driven via safety contacts

without detection of shorts across contacts

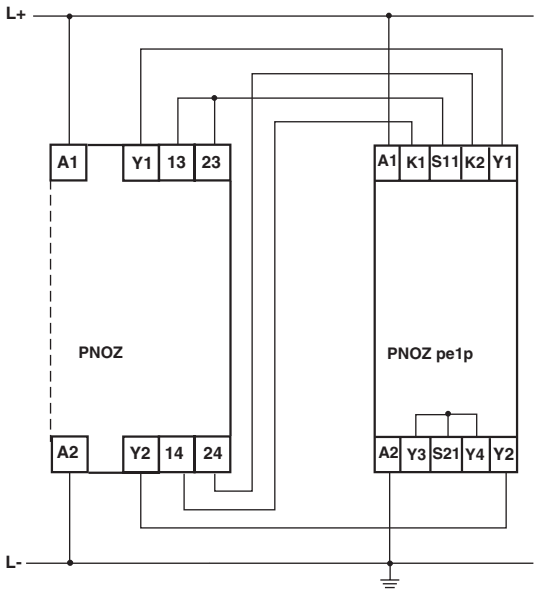

with detection of shorts across contacts

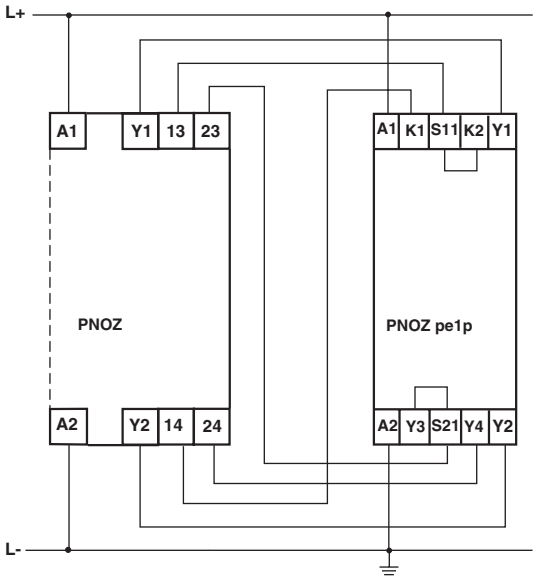

Control Module
PNOZ pe1p

General Technical Data	
Unless stated otherwise in the technical details for the specific unit	
Electrical Data	
Frequency Range AC	50 ... 60 Hz
Residual Ripple DC	160 %
Contact Material	$AgSnO_2$
Continuous Duty	100 %
Environmental Data	
EMC	EN 61000-4-6, 04/97 EN 61000-6-2, 04/99
Vibration in accordance with EN 60068-2-6, 04/95	Frequency: 10 ... 55 Hz, Amplitude: 0.35 mm
Climatic Suitability	DIN IEC 60068-2-3, 12/86
Airgap Creepage	DIN VDE 0110 part 1, 04/97
Ambient Temperature	-10 ... +55 °C
Storage Temperature	-40 ... +85 °C
Mechanical Data	
Torque Setting on Connection Terminals	0.6 Nm (screws)
Mounting Position	Any
Housing Material	Front: ABS UL 94 V0 Housing: PPO UL 94 V0
Protection	Mounting: IP 54 Housing: IP 40 Terminal Range: IP 20

The units were tested in accordance with the relevant standards current at the time of development.

Order References

Type	U_B	Order No.
PNOZ pe1p	24 V DC	773 900